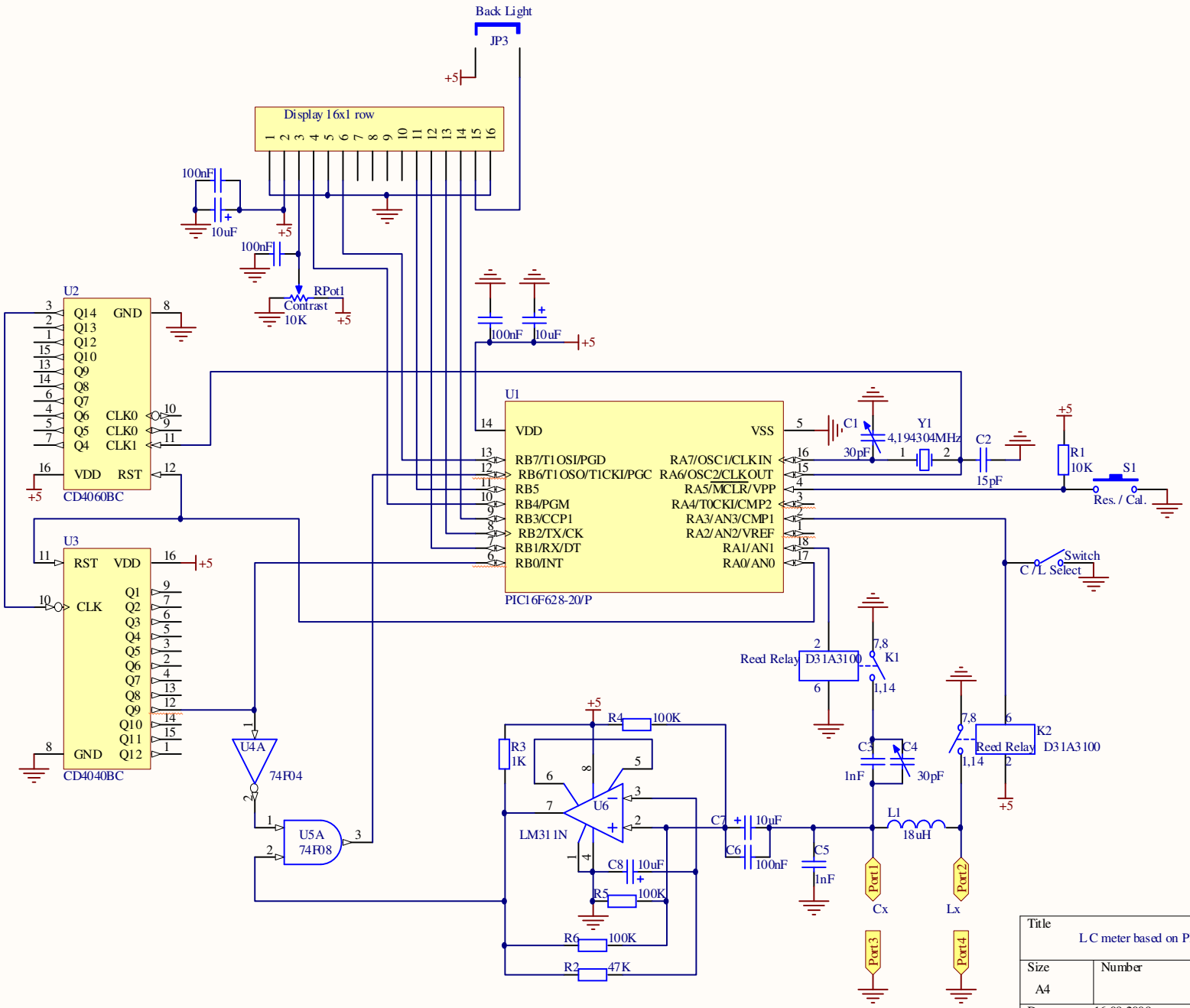

Title	L C meter based on PIC16F628	
Size A4	Number	Revision 1.0
Date: 16.09.2009		Sheet of
File: D:\Proekti\.\LC-METER.SCHDOC		Drawn By: Ar2r