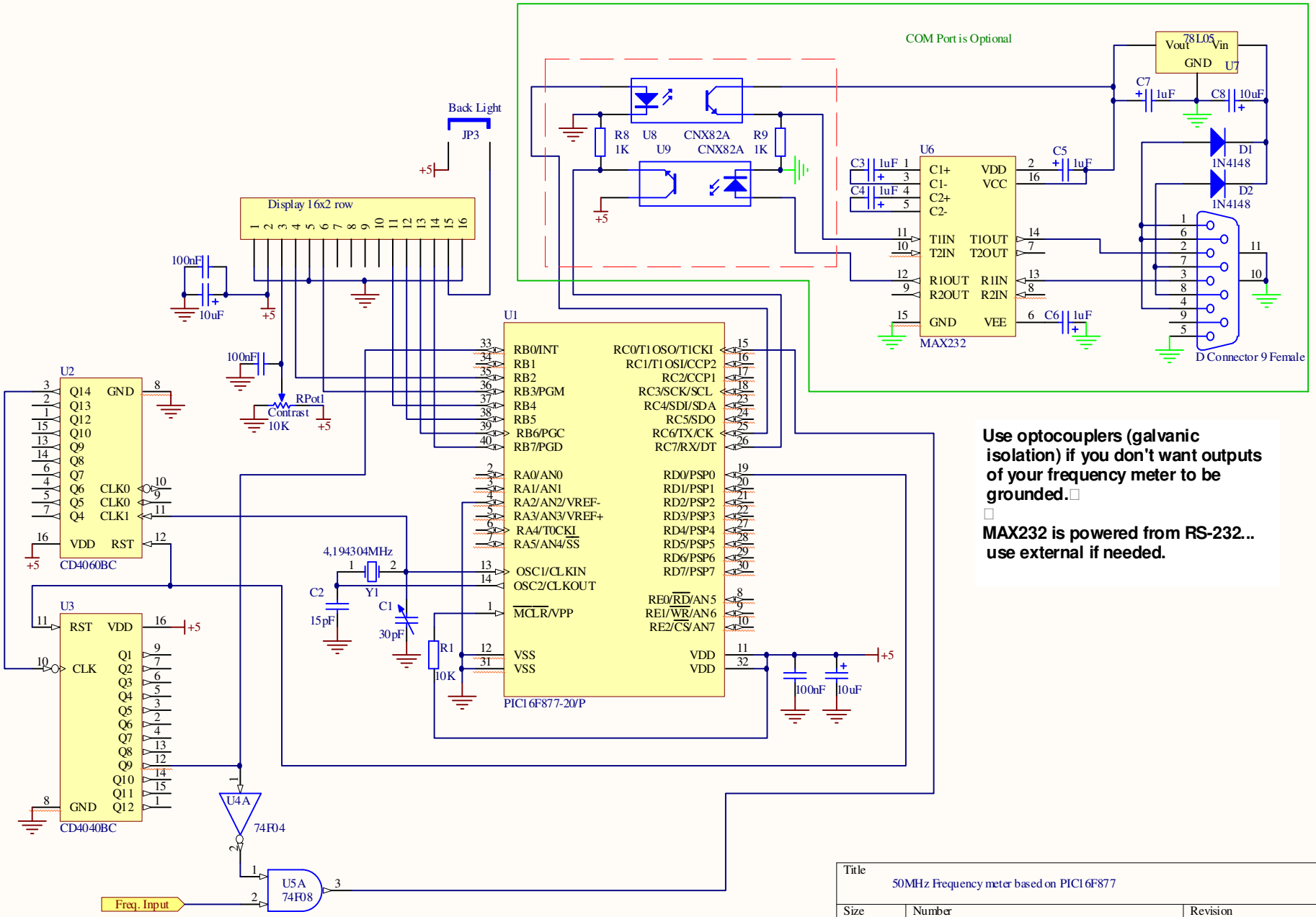

Title	50MHz Frequency meter based on PIC16F877	
Size A4	Number	Revision 1.0
Date: 15.04.2009	Sheet of	
File: D:\Proekti\..\Frequency Meter 50MHz.Schlbdot	Drawn By: Ar2r	